Robot Procedure 2016_26

Jul 5st

2016

Procedure for Robot Model R-2000iC/125~210 R/F Lubricating Information

[Applicable for all Alpha/Beta-iA/B Series Amp
This presentation informs actual greasing point location, volume of grease, before and after greasing, Robot posture for greasing, Residual pressure release, etc.
Please refer Robot mechanical unit maintenance manual for detailed information]

Robot Model R-2000iC/125~210 R/F Lubricating Information

This presentation informs actual greasing point location, volume of grease, before and after greasing, Robot posture for greasing, Residual pressure release, etc. Please refer Robot mechanical unit maintenance manual for detailed information .

J1~6 Greasing Points Location on Mechanical Unit

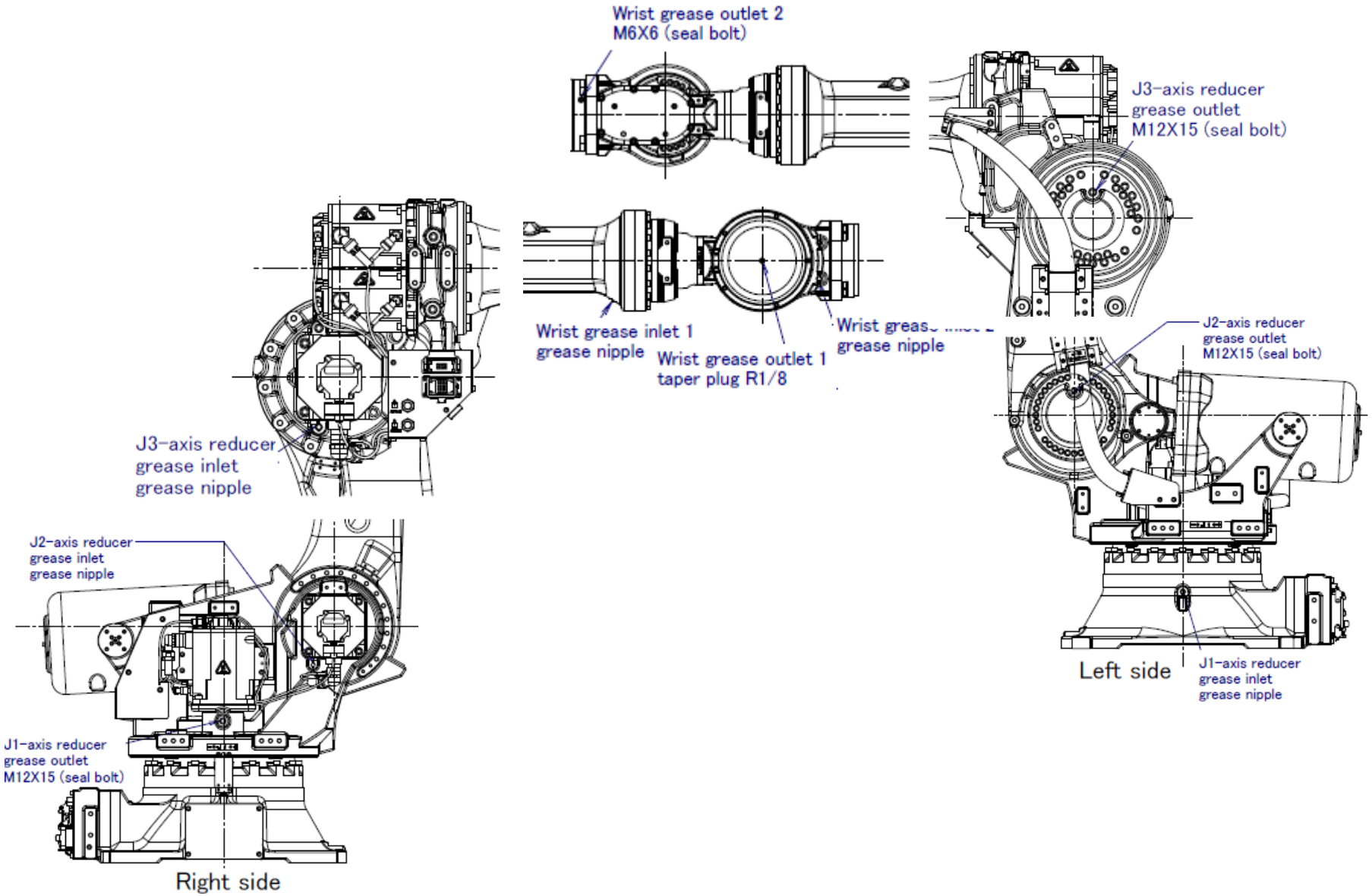

J1 Greasing Inlet/Outlet Location on Mechanical Unit

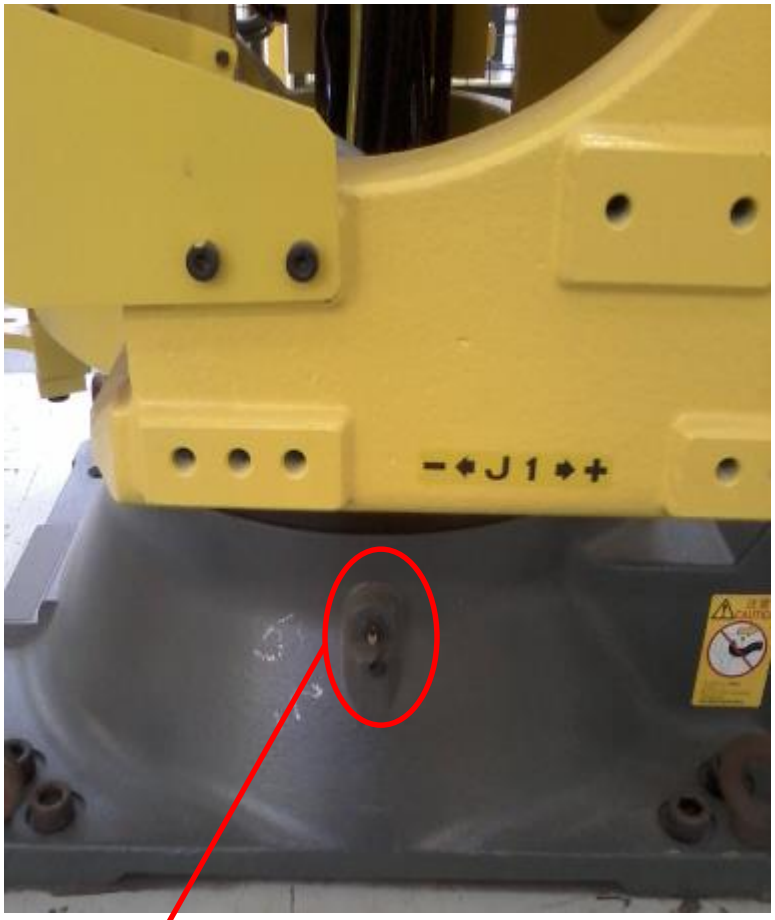

J1 Axis Inlet

J1 Axis Outlet

J2 Greasing Inlet/Outlet Location on Mechanical Unit

J2 Axis Inlet

J2 Axis Outlet

J3 Greasing Inlet/Outlet Location on Mechanical Unit

J3 Axis Inlet

J3 Axis Outlet

J4~6 Greasing Inlet/Outlet Location on Mechanical Unit

J4/J5,J6 Axis Inlet

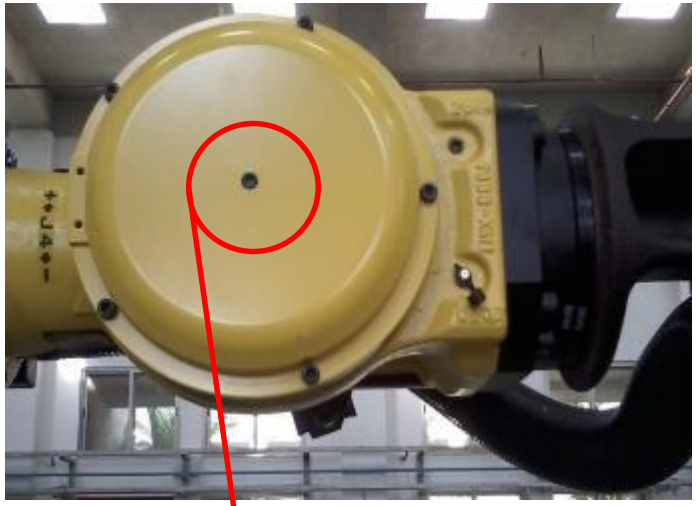

J4/J5.J6 Axis Outlet

Balancer Unit Greasing Inlet/Outlet Location on Mechanical Unit

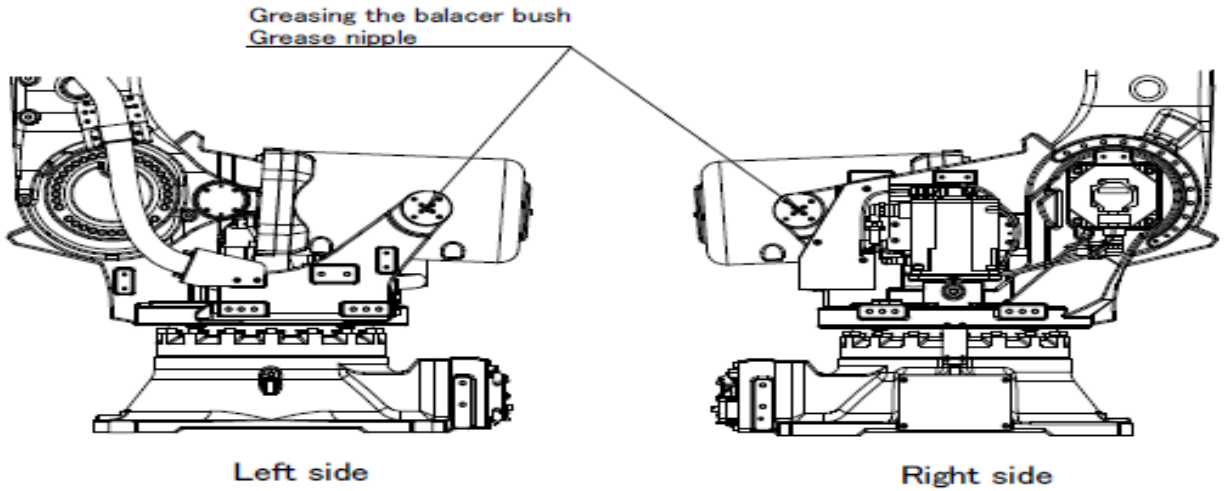

Balancer Shaft Inlet

Balancer shaft outlet

Lubrication Specification

Unit	Grease Specification	Volume (Kgs)
Mechanical	A98L-0040-0174#16KG	12
Balancer	A97L-0001-0179#2-0.4	0.400

Greasing Tools Sample		
Manual	Pneumatic	Hand Held

- Greasing tip pressure should be <0.15MPa in case of manual or pneumatic pumps
- When a manual pump is used for greasing, the standard rate is two pumping cycle per 3Sec.

Before Greasing

- Use specified grease and volume for lubricating the mechanical unit
- If Robot was idea from long time before greasing, please create the Robot axis motion program considering the below table conditions and execute the same:

Grease replacement position	Motion angle	OVR	Operating time
J1-axis reducer	80° or more	50%	20 minutes
J2-axis reducer	90° or more	50%	20 minutes
J3-axis reducer	70° or more	50%	20 minutes
Wrist	J4 : 60° or more J5 : 120° or more J6 : 60° or more	100%	10 minutes

- Before greasing ensure all the greasing in & outlet points are left open
- For better lubricating the joints and easy accessibility of In/Outlet points move the robot arms to necessary posture indicated as per the robot model (refer table robot posture)

Robot Posture for Greasing & Volume for Grease

Postures for greasing (R-2000*i*C/165F,210F,125L)

Supply position	Posture					
	J1	J2	J3	J4	J5	J6
J1-axis reducer	Arbitrary	Arbitrary	Arbitrary	Arbitrary	Arbitrary	Arbitrary
J2-axis reducer		0°				
J3-axis reducer		0°	0°			
Wrist		Arbitrary	0°	0°	0°	0°

Postures for greasing (R-2000*i*C/165R,210R)

Supply position	Posture					
	J1	J2	J3	J4	J5	J6
J1-axis reducer	Arbitrary	Arbitrary	Arbitrary	Arbitrary	Arbitrary	Arbitrary
J2-axis reducer		-90°				
J3-axis reducer		-90°	90°			
Wrist		Arbitrary	90°	0°	0°	0°

Models	Greasing	Quantity
R-2000*i*C/165F R-2000*i*C/210F R-2000*i*C/125L R-2000*i*C/165R R-2000*i*C/210R	J1-axis reducer	4250g(4730ml)
	J2-axis reducer	2250g(2500ml)
	J3-axis reducer	1950g(2170ml)
	wrist 1 (J4/J5-axis reducer)	2300g(2560ml)
	wrist 2 (J6-axis reducer)	450g(500ml)

After Greasing

- Releasing the residual or reaming pressure inside the Robot grease cavity is a must after every greasing activity
- Ensure all the greasing inlet & outlet points are left open
- Place bags for collecting excess grease from inlet or outlet points while robot in motion
- Create the Robot axis motion program considering the below table conditions:

Grease replacement position	Motion angle	OVR	Operating time	Open point
J1-axis reducer	80° or more	50%	20 minutes	Open the grease inlets and outlets and perform continuous operation.
J2-axis reducer	90° or more	50%	20 minutes	
J3-axis reducer	70° or more	50%	20 minutes	
Wrist	J4 : 60° or more J5 : 120° or more J6 : 60° or more	100%	10 minutes	

- After completion of above program cycle, fasten with the seal bolts or taper plugs or grease nipples to the grease inlet and outlet points

Thank you for your Attention